Bathmaster, an inexpensive system for real-time depth mapping of lakes and reservoirs

Tom D'Avello and Roger Windhorn

USDA-Natural Resources Conservation Service
1902 Fox Drive
Champaign, IL

Tom.Davello@il.usda.gov
Roger.Windhorn@il.usda.gov

Background

- Artificial water bodies are common
- Subject to sedimentation
- Economic, health and safety factors involved in maximizing life span
- Watershed planning with NRCS for watersheds containing these structures is common

Illinois Reservoirs
1,222
162 with primary purpose as water supply

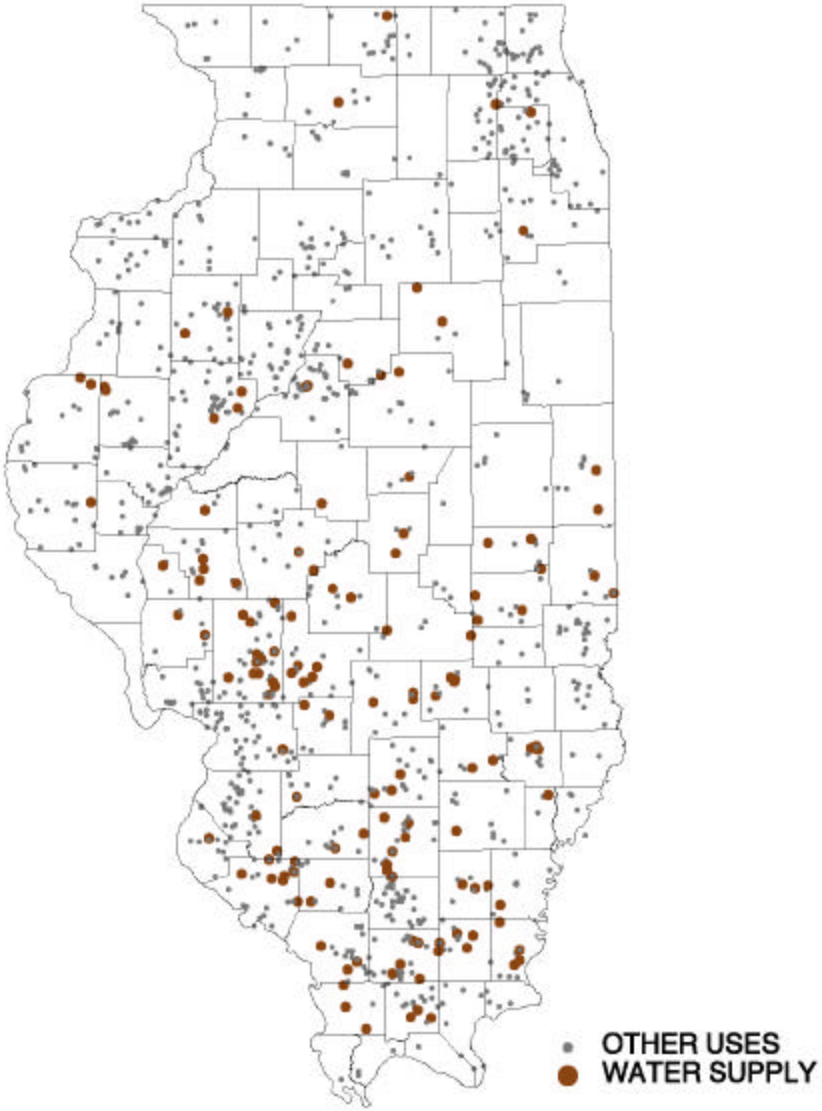

Source: US Army Corps of Engineers Natl. Inventory of Dams, 1999.

The traditional method

- Ground survey completed
- Permanent monuments created
- Rope or cable suspended between monuments
- Measurements made along rope/cable

Traditional sampling scheme

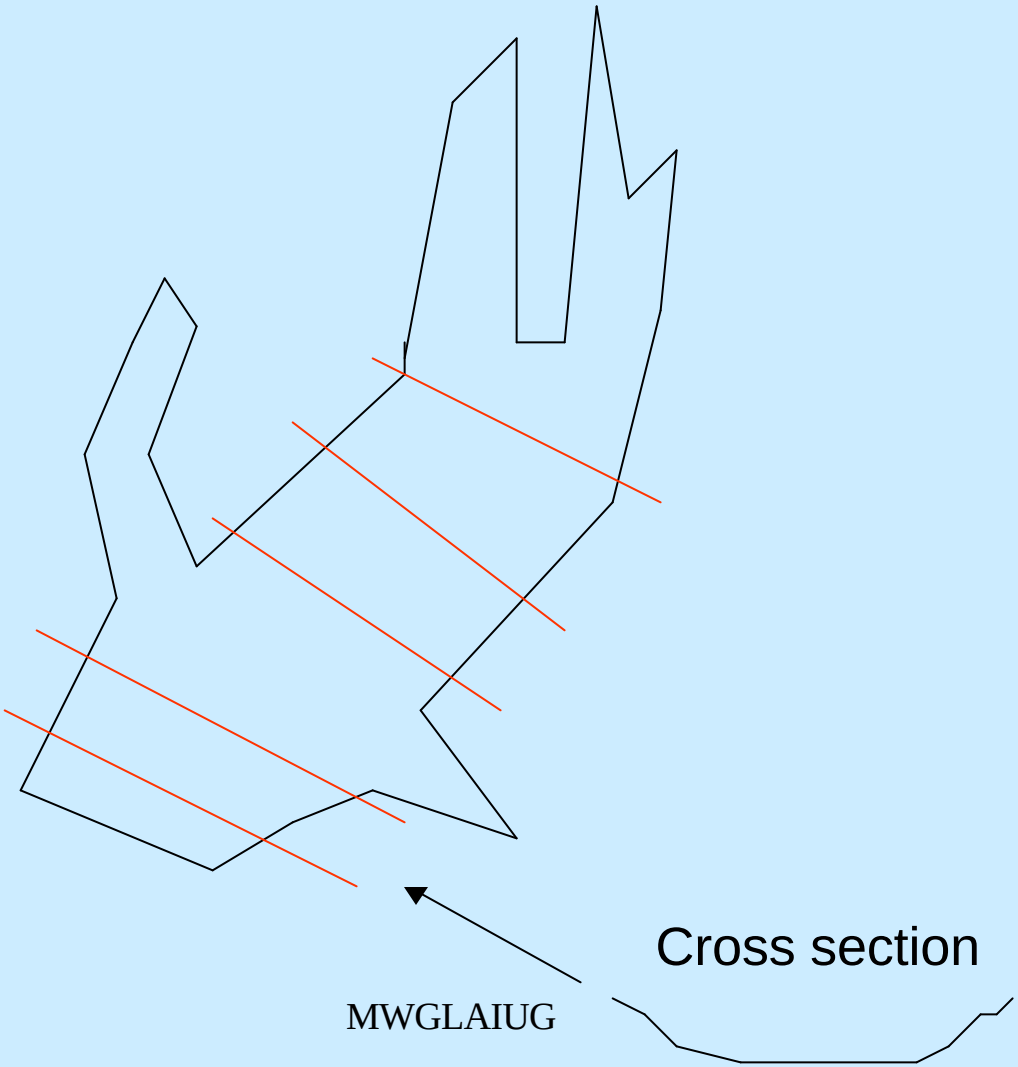

Manual determination of water and sediment depth

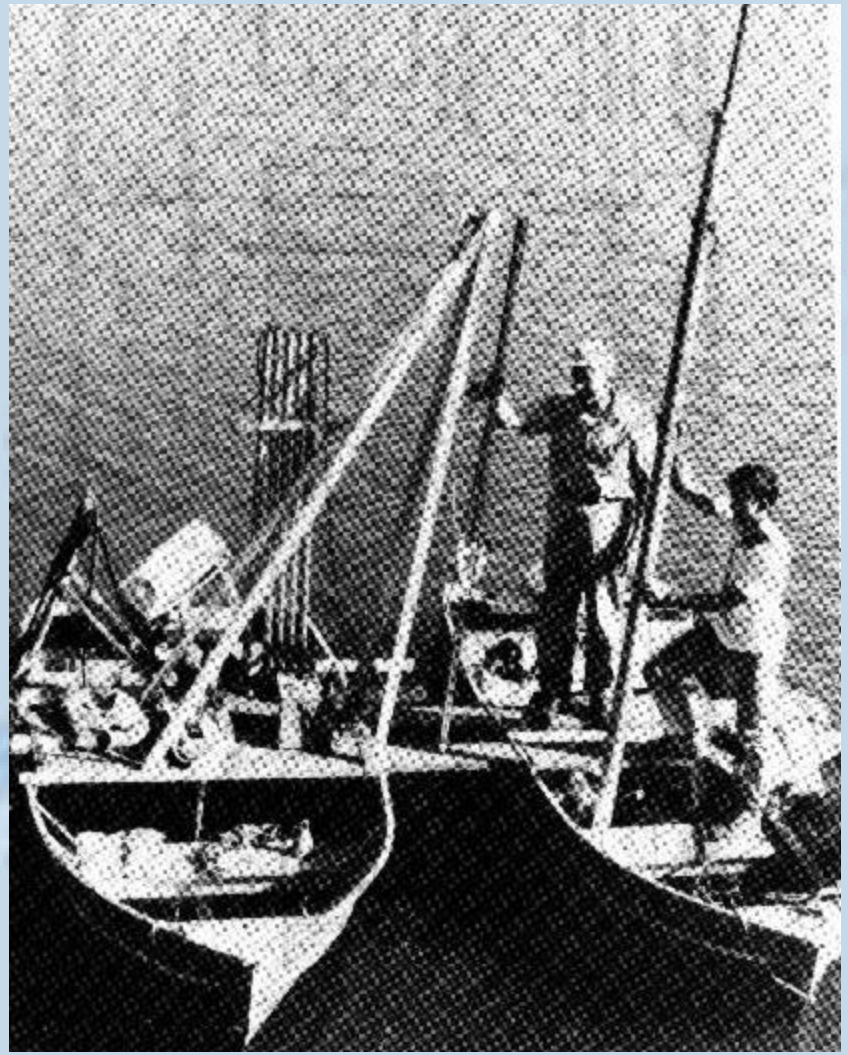

Advantages of traditional method

- Known method
- Repeatable

Disadvantages

- Labor and time intensive
- Expensive
- Limit on maximum size of water body (~1,000ft span)
- Limit on maximum depth (~30ft)
- Limit on number of sample points
- Water and Jet skiers, and fisherman not amused

New Needs

- Increased demand for sediment information
- Method required that is:
  - easier
  - quicker
  - safer
  - less costly
  - less personnel demanding

Improved method

- Using GPS to georeference sample points
- Sample in pattern and frequency acceptable to collector
- Assemble data for GIS
- Interpolate and determine volumes

Advantages of improved method

- Quicker
- Safer
- Less personnel

Disadvantages

- Still required manual sampling
- Required GPS operator and side records
- Limited number of samples

What to improve ?

- Capture depth and position simultaneously
- Automate the capture of both
- Display current position in relation to past path
- Find or assemble system for modest price

Bathmaster

- Utilize existing GeoLink package with XDS module
- Utilize existing laptop and GPS receiver
- Find sonar that outputs NMEA 0183 for right price
  - Most involved with bathymetric mapping:
    - Do it for a living
    - Have plenty of money
    - Usually have “Ships”, not borrowed boats

Components

- GeoLink XDS module
- Laptop with PCMCIA serial port card
- Lowrance 350C Sonar
- Rockwell PLGR+ PPS receiver

View of Bathmaster from John Boat

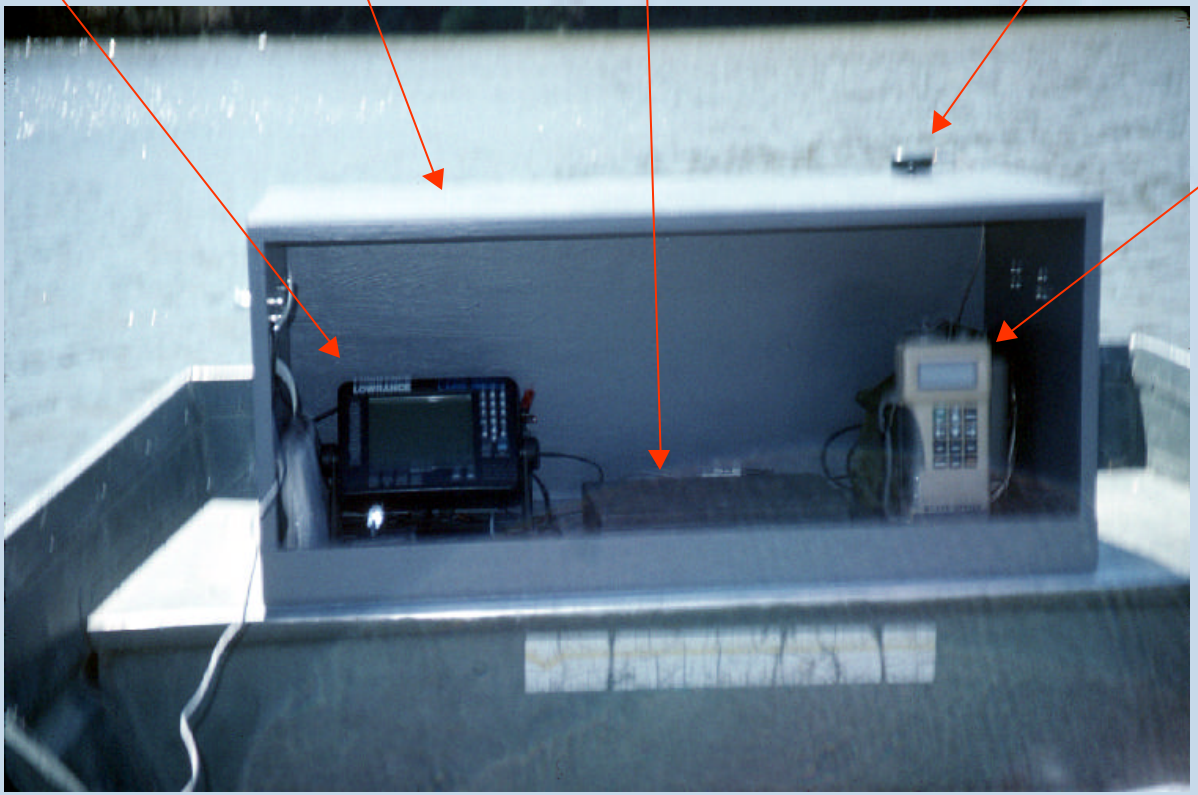
Solar Panel
not shown
Sonar
Laptop
GPS Antenna
GPS
Receiver

Bathmaster collection procedure

- Digitize project area i.e. current reservoir water boundary
- Define sensor device and collection interval
- Verify sonar and GPS
- Drive along random “transects” of reservoir

Current shore determined from current aerial photographs (Digital orthos are used where available, otherwise rectified photography is used with resulting vectors adjusted as needed)

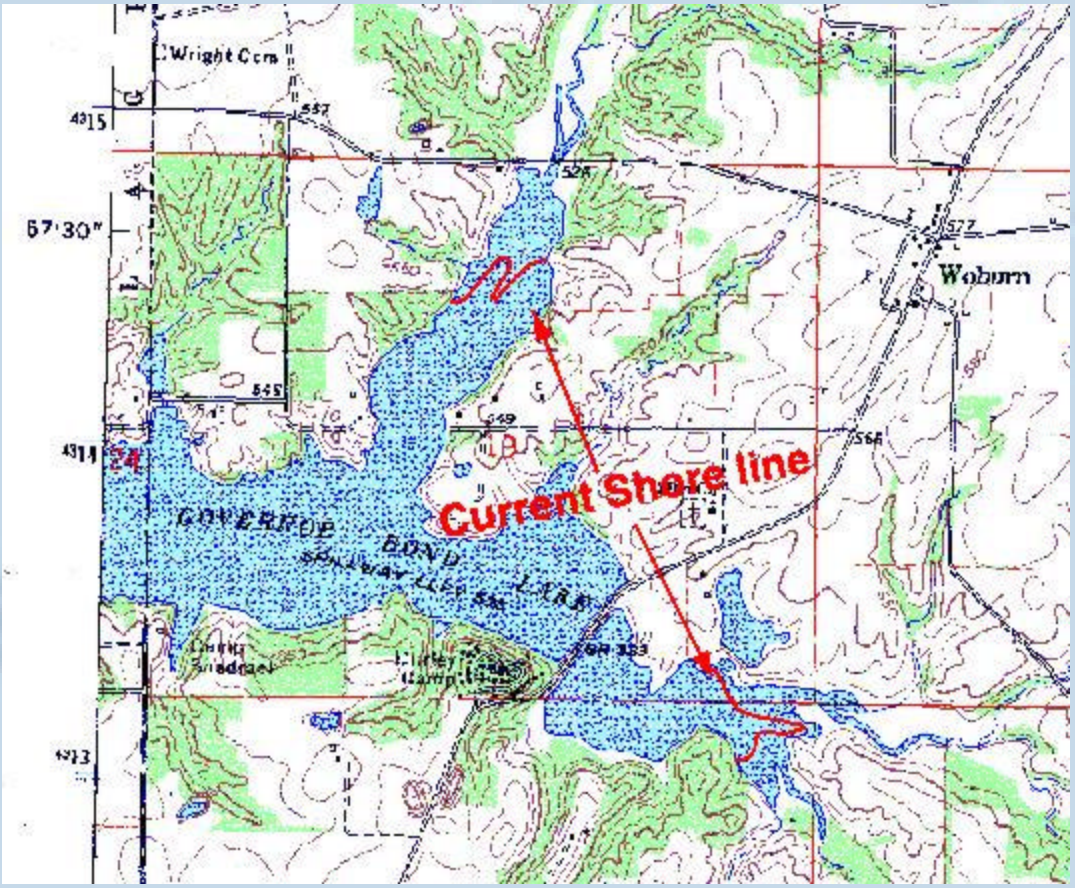

Determine collection interval based on rate of travel

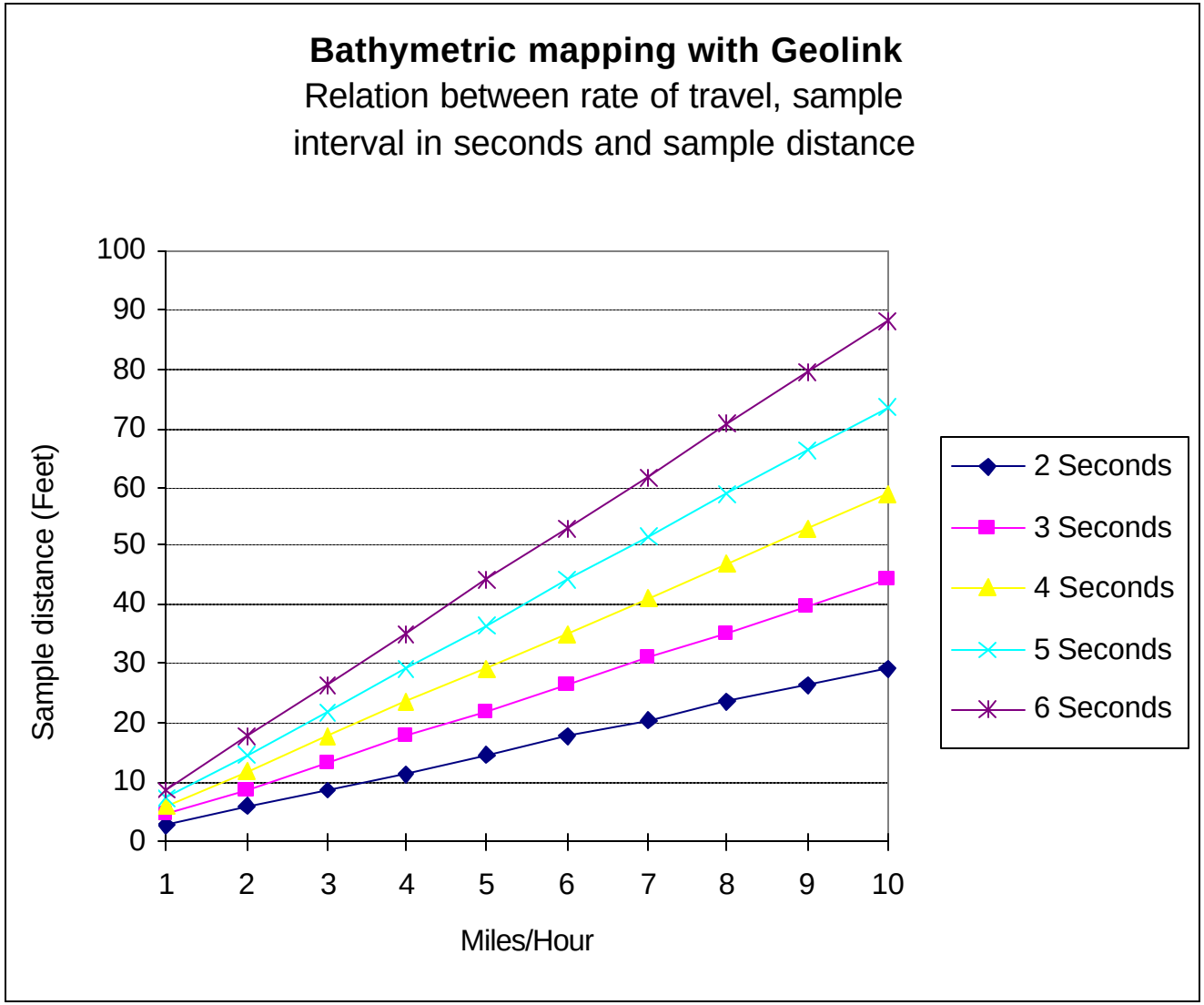

Path of data collection shown in black

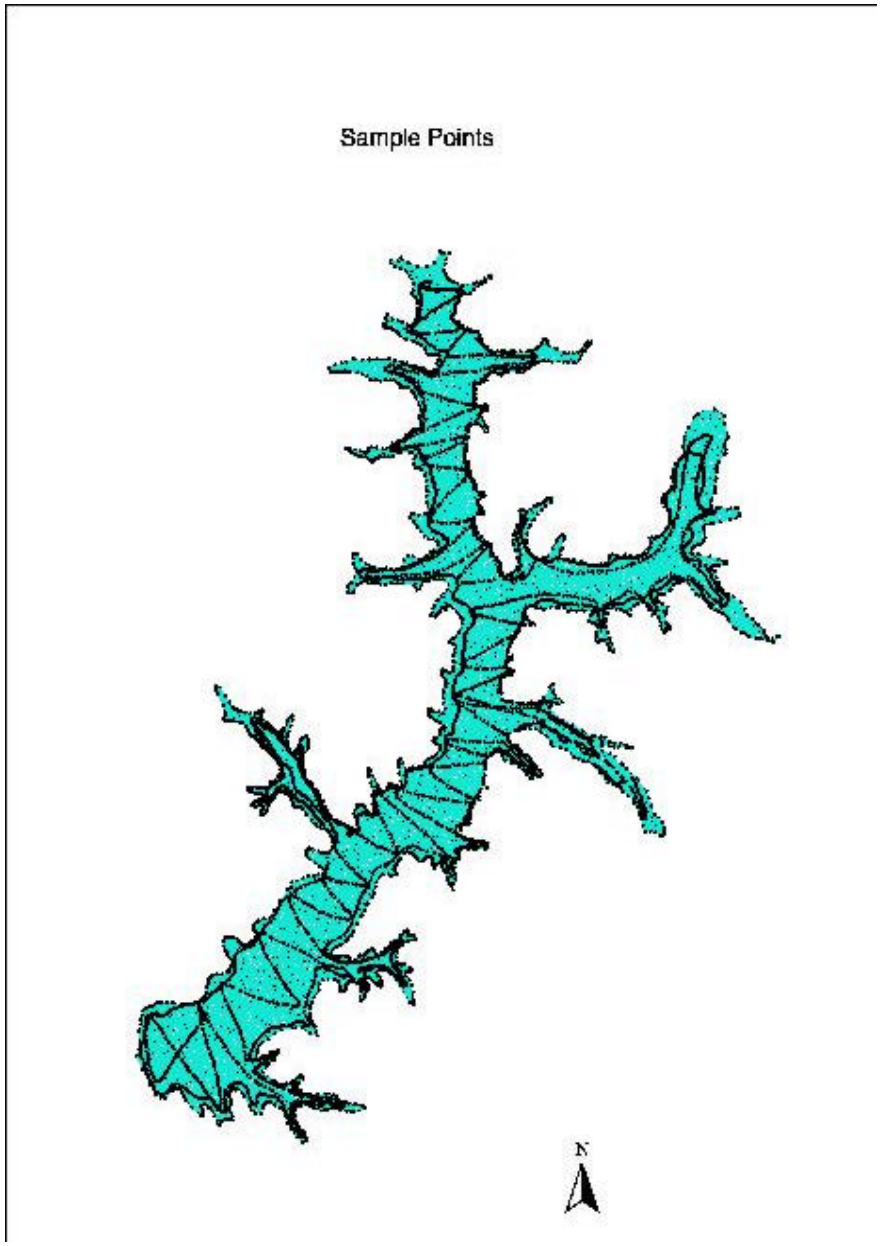

Post-processing

Input data from laptop into GIS

Append “zero” depth from vertices of
current water boundary shoreline

Use interpolation techniques to generate surface
Could include:
- Spline
- Kriging
- Triangulated Irregular network (TIN)
- Inverse distance weighting

Calculate volume from “raster” with:
E(resolution)^2 * depth * (number of pixels of given depth)

Advantages of Bathmaster

- Efficient,
- Less personnel
- No manual sampling
- Safer
- Lake users not impacted
- Data output visually descriptive and understandable

Problems

- Battery power, but alleviated with Solar/battery pack
- GPS losing lock on satellites (can’t fix, but planning ahead avoids lapses in data collection)

Sample output product

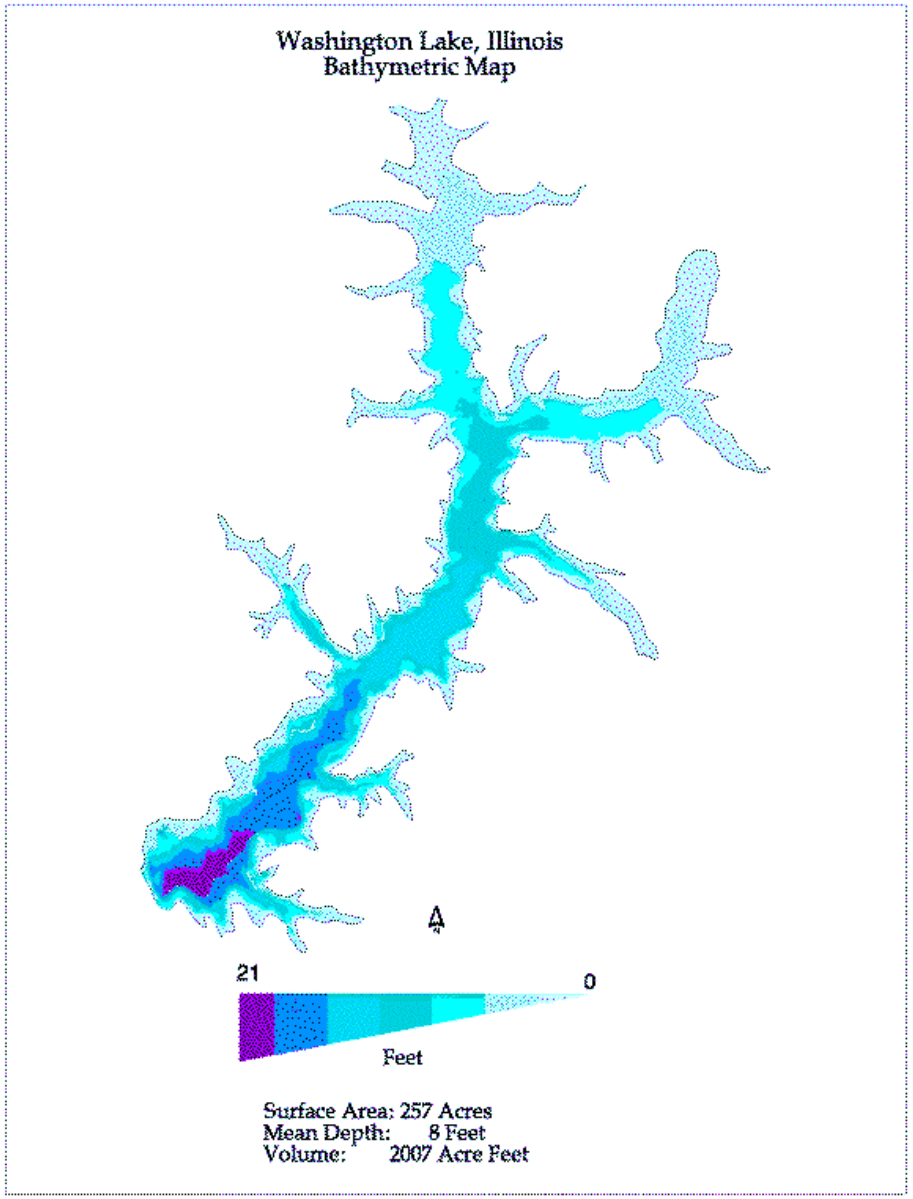

Schematics of Solar/ battery power source

pkesler@prairienet.org
for questions regarding design

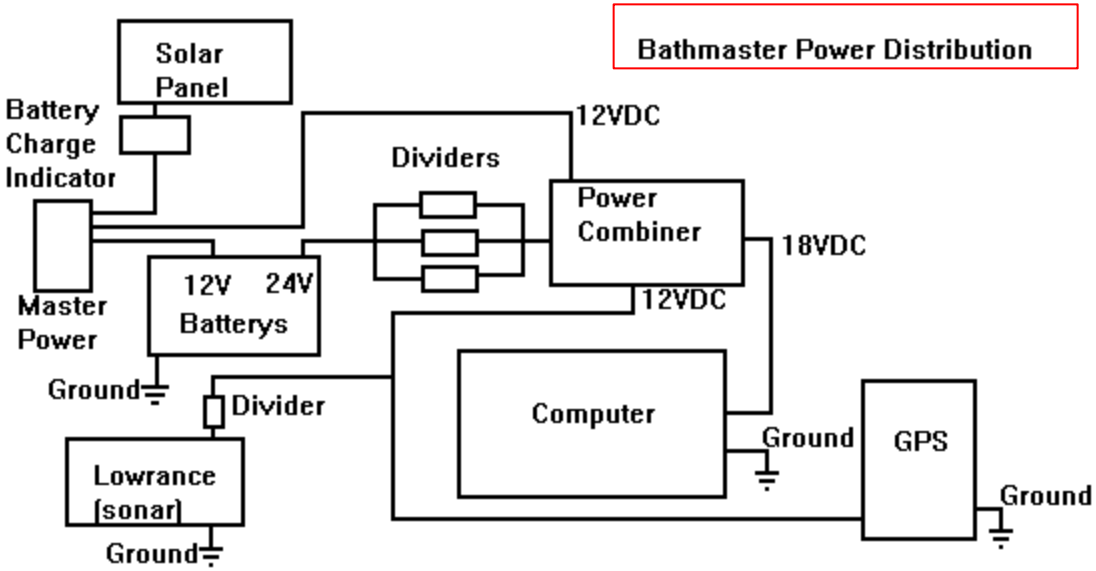

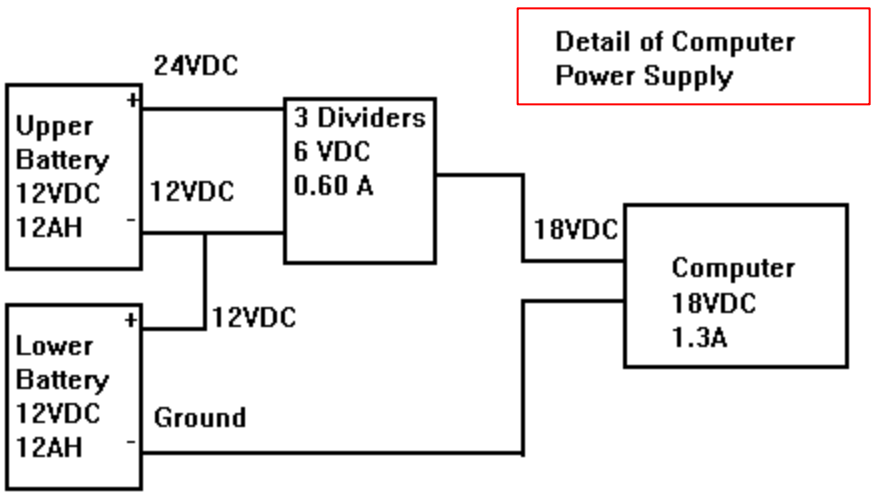

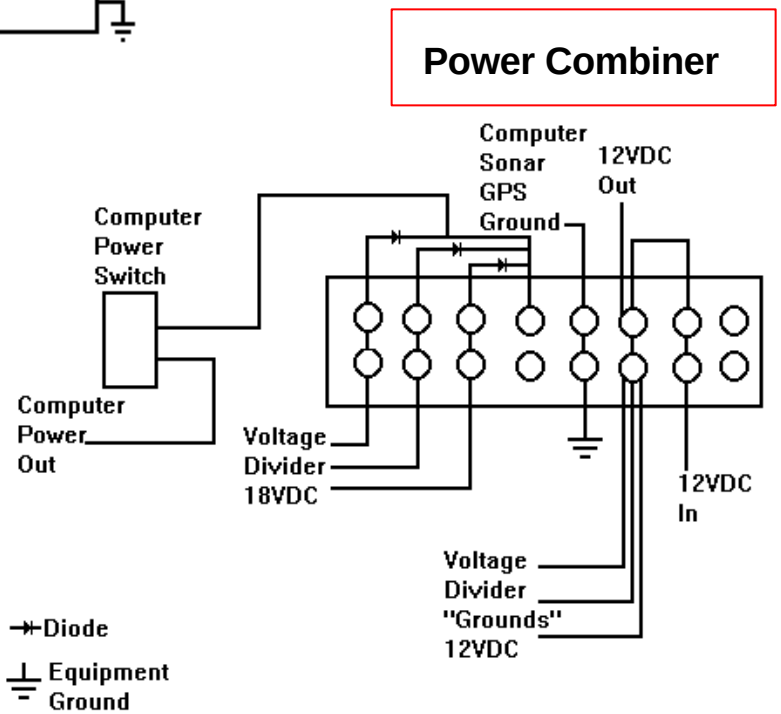

Final Thoughts

- Determination of original bottom biggest problem

  Original estimates (derivation often a mystery)
  Original drawings (usually non-existent or of a scale that is impractical for data conversion, or lack of funds to convert if source drawings are available)

- Automated procedure, “Subbottom acoustic profiling”
  Most promising, but cost prohibitive for our needs and budget

Citations

Berry, J.K. 1997. Justifiable Interpolation. GIS World, Vol 10, No.2:34.

D'Avello, T.P., R. Windhorn. 1998. Bathmaster: An automated system for bathymetric mapping. Geo Info Systems, Vol 8, No. 4, 16-18.

LeBlanc, L.R., L.Mayer, M.Rufino,S.G.Schock, J.King. 1992. Marine sediment classification using Chirp sonar. Journal of Acoustical Society of America. Vol 1, p. 107-115.

Naval Marine Electronics Association. 1997. NMEA 0183 Standard for Interfacing Marine Electronic Devices, Version 2.20. NMEA, New Bern, N.C.

United States Army Corps of Engineers. 1996. National Inventory of Dams, Water Control Infrastructure. Federal Emergency Management Agency. CD-ROM.

United States Department of Agriculture. 1975. Sedimentation. Natural Resources Conservation Service, National Engineering Handbook, Section 3.